CITY OF RIVERSIDE CITY COUNCIL MEETING AGENDA
RIVERSIDE CITY HALL COUNCIL CHAMBERS
60 N GREENE STREET

WORK SESSION
Thursday, January 17, 2019
6:30 PM

1. FY 19-20 Budget discussion
    a. Capital projects
    b. Other business
2. Discussion on adoption of SUDAS standards for development
3. Discussion on filling Deputy Clerk vacancy
    a. Full-time or part-time position
    b. City Council interest in City Administrator

Monday 1-14-19 Conf. call

City of Riverside, Iowa - Capital Projects Summary

PROJECTS	Actual FY 2015-2016	Actual FY 2016-2017	Projection FY 2017-2018	Projection FY 2018-2019	Projection FY 2019-2020	Projection FY 2020-2021	Projection FY 2021-2022	Projection Future Years
Cherry Lane Subdivision	515,840	81,870	25,875					
Fire Truck Purchase	755,828							
Washburn/2nd St paving/Storm		674,639	991,445					
Ella Street Project	523,007	862,631	2,842					
Boise Street Watermain & Sewer Project	229,072	2,706						
Casey's Sewer Main Replacement	4,015	14,124						
Remote Read Meters		224,037	553					
Pioneer St/Hwy 22 Streetscape & Wtr Main	28,004	24,162	972,054	1,143,946				
Hwy 22 Resurface & St Mary's				2,150,000				
Hall Park Angle Parking				70,000				
Hall Park Shelter	164	12,659	213	200,000	220,000			
3rd St Wtr Main						350,000		
3rd St Paving(Washington to Hwy 22)						1,200,000		
2nd Street Paving(Washington to Hwy 22)					500,000			
4th St Water Main							350,000	
4th St Paving (Boise to Hwy 22)							1,400,000	
Washburn St Paving (2nd to 4th, 2 blocks)					450,000			
Greene St & Elm Paving (Hwy 22 around the corner at top of hill to Ella)							1,000,000	
Galileo Drive & N Sewer Ext			114,647	433,540				
C) North Growth Phase 1				585,000	550,000	550,000	550,000	
D) Ash/Tupelo Imp.					422,500			
F) SRTS Sidewalk					195,000			
Community Center	21,110	4,036		100,000	100,000	100,000	100,000	
Miscellaneous	11,893	4,189	12,227					
TOTAL PROJECTS	2,088,932	1,905,052	2,119,857	4,682,486	2,437,500	2,200,000	3,400,000	-

NORTHLAND SECURITIES

Prepared on: 1/10/2019

FUNDING SOURCES	FY 2015-2016	FY 2016-2017	FY 2017-2018	FY 2018-2019	FY 2019-2020	FY 2020-2021	FY 2021-2022
Casino Funds	800,000	973,000	880,000	764,000	764,000	764,000	764,000
LOST Funds	60,000	65,400	63,000	63,000	63,000	63,000	63,000
WCRF quarterly payment	54,000	55,000		42,000	54,000	54,000	54,000
Sale of Cherry Lane lots	5,000	184,242	95,857	140,000			
Riverboat Grant Funds (one time for fire truck)	125,000						
Fire Donation Fund (one time for fire truck)	105,000						
Fire Truck Note	231,000	(231,263)					
Casey's Portion of Sewer Main							
Casino Fund Property Acquisition							
Water Fund		75,000					
Sale of Habitat Lot	10,000						
Storm Sewer Fund		17,700	31,000	18,400	18,900	18,900	18,900
Bond Proceeds	1,279,111						
Transfer from General Fund			300,000		250,000	250,000	250,000
DOT Reimbursement				800,000			
Utility Reimbursement			11,858				
PROPOSED ONE TIME TRANSFERS							
General Fund				1,145,668			
Casino Fund	300,000		200,000		150,000		
Water Fund			95,000	100,000	140,000		
Road Use Tax Fund			228,000	32,800	80,000		
Sewer Fund			100,000	100,000			
TOTAL FUNDING SOURCES	2,969,111	1,139,080	2,004,715	3,205,868	1,519,900	1,149,900	1,149,900
SURPLUS/DEFECIT	880,179	(765,972)	(115,142)	(1,476,618)	(917,600)	(1,050,100)	(2,250,100)
Begininng Balance	3,685	883,863	117,891	2,749	(1,473,869)	(2,391,469)	(3,441,569)
Ending Balance	883,863	117,891	2,749	(1,473,869)	(2,391,469)	(3,441,569)	(5,691,669)

NORTHLAND SECURITIES

Prepared on: 1/10/2019

NORTH LIBERTY'S SUPPLEMENT TO THE IOWA STATEWIDE URBAN DESIGN AND SPECIFICATIONS (SUDAS)

PLANS OF RECORDS SHALL INCLUDE

1. Stationing of all building sewers.

2. Stationing of all water service corporation valves.

3. Stationing of all water service curb stop valves.

4. Stormwater management facilities, including elevations, final grading and drainage ditches/swales.

5. Sewer rims, inverts and slopes.

DRIVEWAY APPROACHES

1. Driveways shall have ½-inch preformed expansion joint material at the front and back of sidewalk. Driveways across from "T" intersections shall have 1-inch pre-formed expansion joint material at the front and back of the sidewalk. When expansion joints are installed between the driveway approach and back of curb the joint shall have approved joint sealant material applied over the entire joint.

2. The finish shall be a broom finish or astroturf drag.

3. Curb grinding is required for the removal of the existing curbs for driveway connections. Grinding shall consist of saw cutting the back of curb and milling the curb with a milling machine to provide a smooth uniform joint between the curb line and driveway apron. Curb removal may be used when authorized by City Engineer or designee.

4. There shall be a minimum of twenty (20) feet between the end of the radius of a street intersection and the beginning of a driveway curb removal as measured at the curb line in all instances. Additional distance between the radius of a street intersection and the beginning of a driveway curb removal may be required by the City Engineer where deemed necessary because of high traffic volumes or other safety concerns.

5. A single driveway approach will be allowed to be placed over the lot line dividing residential duplex units located in RD zoning district. The single driveway approach shall be centered over the lot line with a maximum width of thirty (30) feet at the public sidewalk and thirty-six (36) feet at the curb line.

6. The curb opening shall not be constructed closer than three (3) feet to the side property line extended to the curb.

SANITARY AND BUILDING SEWERS

1. Vitrified clay pipe and ductile iron pipe products are prohibited.

2. Video inspection of all sanitary sewer mains is required prior to the city accepting of the sanitary sewer system.

3. All lift stations shall include emergency power backup generation.

4. All lift stations shall include forcemain pigging and launch piping/valves adequate for cleaning and maintaining forcemain.

5. New lift stations may also require downstream manhole rehabilitation subject to approval of the City Engineer.

6. A two-year maintenance bond covering defective materials and workmanship is required for all sanitary sewer system improvements.

7. External chimney seals only for sanitary sewer manholes

8. Refer to City of North Liberty "Accepted Manufacturers for Sanitary Distribution Materials" for allowable sanitary sewer system component manufacturers.

SIDEWALKS

1. Sidewalks shall be located 1 foot from the property line, except in areas in which a different offset is required to match existing walks or grades as authorized by City Engineer.

2. Sidewalks 4 to 6 feet wide shall have a minimum thickness of 4 inches. Sidewalks greater than 6 feet wide shall have a minimum thickness of 5 inches with fiber mesh reinforcement or 6 inches of non-reinforced concrete.

3. Sidewalk joints shall be spaced to form square panels.

4. Isolation 1/2-inch performed expansion joints shall be installed at approximately 100-foot intervals and at every property line.

STORMWATER

1. Refer to City of North Liberty "Post-Construction Runoff Control" ordinance for specific stormwater management requirements and criteria. Where conflict occurs between the ordinance and this Chapter, the ordinance shall prevail.

2. Storm intakes: Open throat curb intakes shall be provided for all public and private streets.

3. Intakes shall be spaced so that for a five (5) year storm arterial streets shall have two traffic lanes free of excess water at all times. Local and collector streets shall be designed to have one twelve (12) foot traffic lane free of water. Stormwater shall not cross an intersection but can follow a curb around its radius.

4. For a one hundred (100) year storm, the ponding of surface water on local, collector, and arterial streets must not exceed a depth of one (1) foot at the gutter. Water exceeding one (1) foot shall be designed to overflow into an overland flow route. This applies to temporary ponding from local drainage only.

5. A five-year maintenance bond covering defective materials and workmanship is required for all storm sewer system improvements.

STREETS AND RELATED WORK

1. A minimum 6" thick granular subbase (IaDOT gradation 12 or 14) shall be provided for <u>all</u> public and private streets.

2. Subdrains shall be provided for all streets. Minimum size = 4" diameter. In areas where subdrains may also be used for sump pump connections, minimum size shall be 6" diameter.

3. Required minimum thickness for rigid pavements shall be as follows:
   a. Local roads: 7" PCC
   b. Collector roads: 8" PCC
   c. Arterial roads: 9" PCC
   d. Industrial roads: 8" PCC

4. A five-year maintenance bond covering defective materials and workmanship is required for all street improvements.

STREET TREES

1. No street trees shall be planted within the right-of-way, except for landscaping projects approved by City of North Liberty.

WATER MAINS AND APPURTENANCES

1. Refer to City of North Liberty "Accepted Manufacturers for Water Distribution Materials" for allowable water system component manufacturers.

2. A two-year maintenance bond covering defective materials and workmanship is required for all water system improvements.

3. All plastic water service lines shall have tracer wire attached to the service line in accordance with SUDAS and Water Department requirements.

4. Installation of solid concrete blocks is acceptable thrust blocking material when megalug flanges are installed.

TIFFIN

Amendments to the Statewide Urban Design and Specifications (SUDAS) Design Standards Manual and Specifications Manual by the City of Tiffin
Approved Date: April 4, 2017

Introduction

There are references made throughout this document to the "City Engineer". The "City Engineer" is also referred to as the Jurisdictional Engineer throughout the SUDAS Manuals and this document. This is the engineer employed by the community; public official or engineering consultant retained by the community that functions as the local engineering authority.

The SUDAS Design Standards Manual and the SUDAS Specifications Manual have been modified by the amendments contained in this document to meet the needs of the City of Tiffin. The City of Tiffin reserves the right to periodically review and update these amendments to the SUDAS Design Standards Manual and the Specifications Manual. Contact the City of Tiffin to validate these amendments before their use.

When it becomes necessary or desirable to vary from the standards and amendments presented in this document, a variance may be requested by the Project Engineer to the City of Tiffin. Such a request shall be made in writing and will include:

1. The standard to be varied.
2. The proposed variation.
3. Justification for the variance.

A written response will be given within thirty (30) business days of the request.

Additional amendments to these standards may be requested by writing to the City of Tiffin with details and justification for an amendment. The City Engineer will meet periodically to discuss proposed amendments and make recommendations to the Planning and Zoning Commission and City Council.

Questions regarding these design standards should be directed to:

The City of Tiffin, City Administrator/Clerk
300 Railroad Street, P.O. Box 259
Tiffin, IA 52340
Tel: (319) 545-2572
Fax: (319) 545-4147

The SUDAS Design Standards Manual may be viewed and printed online at
http://www.iowasudas.org/manuals/manual.cfm?manual=design

The SUDAS Standard Specifications Manual may be viewed and printed online at
http://www.iowasudas.org/manuals/manual.cfm?manual=specifications

The Statewide Urban Design and Specifications (SUDAS) Design Standards Manual shall be adopted with the following amendments:

Chapter 1: General Provisions

1A-1 B Add the following statement at the end of the second paragraph:
The SUDAS Design Manual shall apply to replacement, maintenance, restoration, and rehabilitation projects to the fullest extent feasible.

1B-1 A. Add the following statement:
Jurisdictional Engineer shall also be known as the City Engineer as appointed by the Tiffin City Council.

1B-1 C. Add the following statement:
The Jurisdiction may assign 'City Staff' to perform some or all of the duties of the inspector.

1B-1 D. Substitute Building Permit for 'plumbing permit'.

1B-1 E. Substitute Building Permit for 'plumbing permit'.

1B-1 F. Add the following paragraph:
All gravity mains shall be a minimum of 8-inches in diameter. Developers will be responsible for installing pipe sizes up to 15-inches in diameter within or outside of the development. Consideration for reimbursement of the increase in material costs for mains larger than 15-inches, required for the future needs of the City, may be approved by Council Action.

1B-1 H. Substitute Building Permit for 'plumbing permit'.

1B-1 I. Substitute Building Permit for 'plumbing permit'.

1B-1 J. Add the following paragraph:
All mains shall be a minimum of 8-inches in diameter. Developers will be responsible for installing pipe sizes up to 12-inches in diameter. Consideration for reimbursement of the increase in material costs for mains larger than 12-inches, required for the future needs of the City, may be approved by Council Action.

1B-1 K. Substitute Building Permit for 'plumbing permit'.

1B-1 L. Substitute Building Permit for 'plumbing permit'.

1B-1S "Jurisdictional Permit" permit shall mean Building Permit except as required by the Iowa Department of Transportation.

1B-1 R. Replace the last sentence of the first paragraph with the following:
Refer to City of Tiffin Ordinance 2012-313 for maintenance responsibilities.

1C-1 D. 6. Add the following statement:
The duration of the maintenance bond is three (3) years for all projects involving public improvements.

1C-1 D. 11. Add the following paragraph:
As-built documentation shall be required in the form of reproducible mylar or vellum and in AutoCAD based digital format on compact disc. Drawings shall include horizontal and vertical locations of sewer services, hydrants, valves, fittings, and water services with ties to the property pins as well as any modifications to the plans made during construction.

1D-1 A. 3. Add the following paragraph:

Copies of the plans submitted by the Project Engineer to the City for review by the Jurisdictional Engineer shall be full-size (24" X 36"). The minimum full-size sheet dimensions are 22"X34". Copies of plans for bidding may be scalable half-size (11"X17).

1D-1 E. 2. Replace the second sentence with the following:

The profile should show centerline and form grade/top-of-slab tangent grades, vertical curve data, and break grade data. Top-of-curb tangent grades may be used with approval of the Jurisdictional Engineer, and when used shall be noted as such.

Chapter 2 Stormwater

2C-3 G. 7. Add the following section:

7. Other Jurisdictional Requirements

Castings shall be non-rocking, self-sealing and meet SUDAS specifications. The words "STORM SEWER" shall be cast into the lid. Chimney seals are not required for storm sewer. Concrete spacers or metal shims shall be the only materials utilized to adjust frame elevations. Grout must be used to bond and seal frames to adjusting spacers.

All manholes shall be marked with two metal fence posts to remain in place until landscaping is complete. In developments, the posts shall remain in place until landscaping has been completed by the lot owner.

2D-1 B. 2 Add the following subparagraphs:

d. Drainage way easements for overland flow shall be of sufficient with to contain the 100-year flow and as a minimum shall include the bottom width and side slopes of the drainage way and any necessary overbank areas.

2D-1 D. 3. a. Change to read "12-inches in diameter."

2D-1 D. 4. c. Add the following statement:

Where velocities in a pipe greater than 15 feet per second are calculated, special provisions shall be made to protect against displacement, abrasion, or shock.

2D-1 D. 7. a. Add the following sub-paragraphs.

1. The maximum slope for storm sewer outlet lines shall be 10%.

2. If reinforced concrete pipe is utilized for outlet lines having a slope greater than or equal to 8%, all joints must be tied together. The flared end section and the last two pipe joints shall be tied together in all instances.

2D-1 D. 10. Add the following:

10. Permitted Flows:

a. No sanitary sewers, sanitary sewer services, or septic tanks shall be discharged into storm sewers.

b. No flows from commercial car washes shall be discharged into storm sewers.

c. Sump pump discharge of ground and surface water is permitted.

d. Only ground water is permitted in sump pump discharge tiles less than 12-inches in diameter. No surface water or roof drains are permitted in these systems.

2D-1 D. 11 Add the Following:

11 Outlets: All pipe outlets must extend to an existing, established drainage channel. If there are no existing channels within the property being developed, the developer shall convey the stormwater through an underground piping system to the nearest established drainage channel.

2D-1 D. 12 Add the following:

12. Subsurface Drainage:

a. In predominantly wet areas, area containing hydric soils, and other such areas designated by the City Engineer, a subsurface drainage system shall be provided to receive discharge from sump pumps.

b. A 2-inch service connection manufacture specifically for the pipe being used and approved by the City Engineer shall be provided for each lot abutting the subsurface drainage system.

c. The end of all sump pump services shall be marked with a metal post or #4 rebar at least 24-inches in length buried vertically to within 1-foot of the finished grade.

2D-1 D. 13 Add the following

13. Other jurisdictional Requirements:

a. No Corrugated PVC pipe shall be installed within the public right-of-way or with easements shared with other utilities except for subsurface drainage pipes.

b. No corrugated PVC pipe shall be used where the pipe crosses easements used by other utilities.

c. Flared end sections are required at all storm sewer outlets and shall include IDOT RF-14 ties and rip-rap or other channel protection as recommended by the City Engineer

2G-1 F. 5. Add the following subsection:

5. Other Jurisdictional Requirements:

Refer to City of Tiffin Ordinance 2012-313 for specific requirements.

a. Dry Hydrant Installation

1.) All wet-bottom detention facilities shall have an emergency vehicle accessible dry hydrant installed. Additional information regarding installation is available at the Office of the City Engineer. All dry hydrants installation sites will be approved by the Fire Chief and construction drawings will be approved by the Fire chief and City Engineer.

2.) Figures G-1.02 and 2G-1.03 show typical installation details.

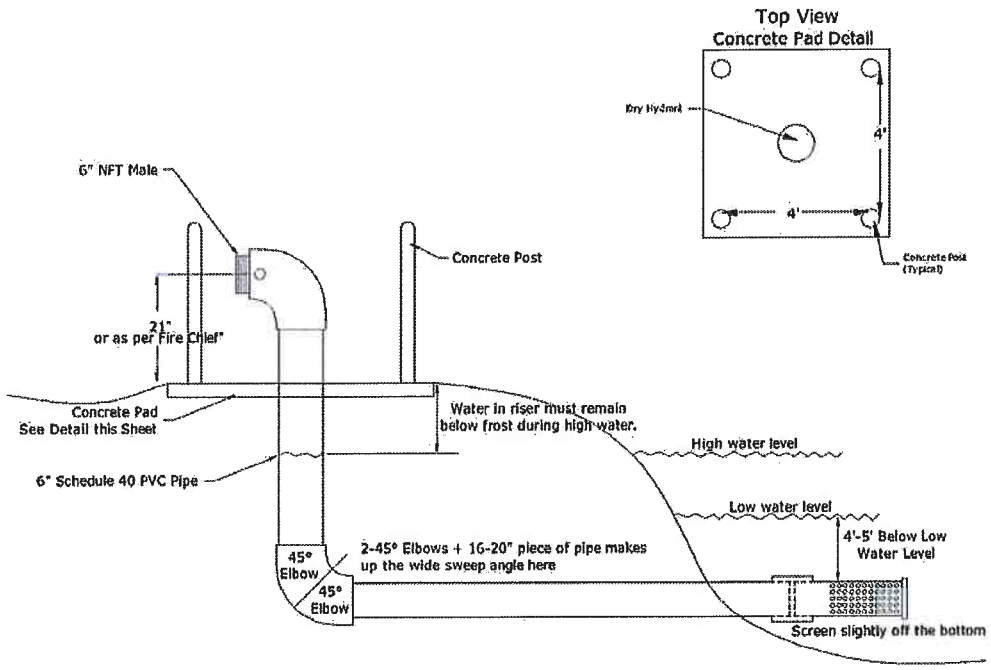

FIGURE 2G-1.02

Use this method only if the bank is so steep such that the backhoe cannot reach deep enough to maintain a level trench cut to the riser or if there is a long uphill run. The idea is to maintain a 5' deep trench cut, from the top of the ground, to the riser. Installer must determine the correct angles for installation of the hydrant.

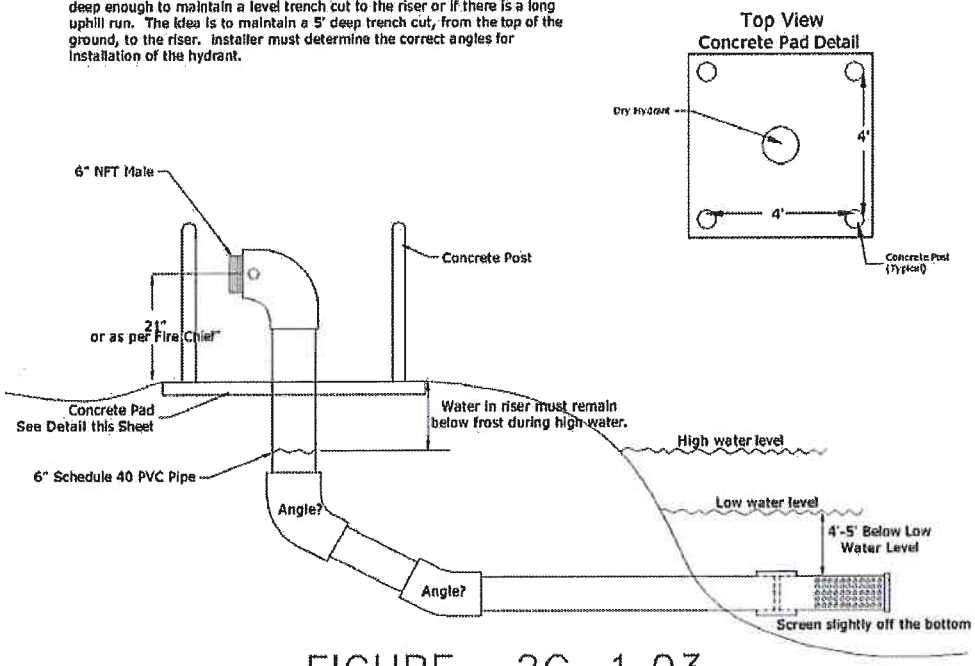

FIGURE 2G-1.03

Chapter 3 Sanitary Sewers

3C-1 C Add the following statement:
Solvent welded connections are not acceptable within the right of way or easements.

3C-1 G. 3. Add the following paragraphs:
Sanitary sewers crossing creeks shall be Class 350 Ductile Iron Pipe encased in reinforced concrete or 3/8-inch steel carrier pipe. Encasement shall be no less than 1-foot beneath the natural bottom of the creek. Greater depths may be required by the City Engineer. Rip-rap all disturbed creek banks and bottom after construction.

3C-1 I. 2 .a. Change minimum easement width to read "15-feet"

3C-1 L. 4. a. 4. Replace paragraph with the following:
4. at intervals not exceeding 400-feet.

3C-1 L. 10. Add the following paragraph f.:
f. For manholes with internal drop connections, the manhole diameter shall be 1-foot larger than that calculated in this section.

3C-1 L. Add the following as Article 11.
11. Other Jurisdictional Requirements
Castings shall be non-rocking, self-sealing and meet SUDAS specifications. The words "SANITARY SEWER" shall be cast into the lid. Chimney seals are required for sanitary sewer and shall span from the casting to the cone section. Concrete spacers or metal shims shall be the only materials utilized to adjust frame elevations. Grout must be used to bond and seal frames to adjusting spacers.

All manholes shall be marked with two metal fence posts to remain in place until landscaping is complete. In developments, the posts shall remain in place until landscaping has been completed by the lot owner.

3C-1 M. 2. Add the following as the second sentence and Table 3C-1.04
All sanitary sewers services shall be in accordance with Table 3C-1.04.

Table 3C-1.04
SEWER SERVICE CONNECTIONS

Type	Number of Connections and Size of Service Pipe	Service Requirements
SINGLE FAMILY	1 – 4"	Existing Service Connection of Correct Size or Closest Pipe
DUPLEX OR ZERO- LOT LINE	1 – 6" or 2 – 4"	Existing Service Connection of Correct Size
TOWNHOUSE OR MULTIPLE SIDE BY-SIDE APTS	1 – 6" Service for Each 2 Units or 1 – 4" Service Per Unit **	Existing Correct Size or Closest Service Connection of Pipe
MULTI-STORY APARTMENTS MAX. 6 UNITS	1 – 6" Service (Max. 6 Units) or 1 – 4" Service for each 2 units **	All units must be plumbed for Correct Size or Closest Pipe
MULTI-STORY APARTMENTS 7 UNITS OR MORE	1 – 8" Service (Max. 12 Units) or 1 – 6" Service per 6 Units or 1 – 4" Service per 2 Units **	Existing Service Connection of Correct Size or Closest Pipe. May require larger private service line built to City Standards
COMMERCIAL OR MIXED USE DEVELOPMENT	Requires City Engineer Approval. ** Must be sized per IDNR regulations	All units must be plumbed. May require larger private Service line built to City standards

** Alternate service configurations with design calculations may be submitted to the City Engineer for approval.

3C-1 M. 2. Add the following to the end of the second paragraph:

Internal drops for service connections may be permitted on manhole deeper than 12-feet upon approval of the City Engineer. Internal drops shall be construction SDR 23.5 PVC with stainless steel bands and fasteners spaced at a maximum of 4-feet. A minimum of two (2) attachment point is required.

3C-1 M Add the following as articles 6, 7, and 8:

6. Sanitary service stubs will be extended from the main to the right-of-way line or outer sewer utility easement line, whichever is further.

7. No two sanitary services shall be constructed in the same trench. Service connections shall be separated by a minimum of 6-feet.

8. The end of all sanitary service stubs shall be marked with a metal post, #4 rebar at least 24-inches in length buried vertically within 1-foot of the finished grade, or a painted 4-inch by 4-inch wood post.

3C-1 N Add the following as Article 3:

3.Lift Stations

It is the City's intention and preference to have all extensions or additions to the sanitary sewer collection system be gravity sewer systems. If gravity sewer is not feasible, lift stations shall be designed to have regional service areas, telemetric alarm systems, provisions for the connection of standby power and auxiliary pumping.

3D-1 Add the following items to Table 3D-1.01

Typical Application	Pipe Material	Size Range	Standard	Thickness Class (min.)	Pipe Stiffness (min.)	Joints
Sanitary Service	PVC	4" and 6"	ASTM D 3034	SDR 23.5	153 psi	Bell and Spigot
Sanitary Service	PVC	4" and 6"	ASTM D 3034	SDR 26	115 psi	Bell and Spigot

Chapter 4Watermains

4B-1 D. 2. a. Add the following statement:

The minimum size for service stubs is ¾-inch in diameter.

4B-1 D. 2. Add the following definitions:

d. Private Service Pipe: A water pipe installed, owned, operated, and maintained by the private consumer as further defined by current City Ordinances. Service pipes are often 1-inch diameter for residential and may be 2-inches to 6-inches in diameter for commercial or 8-inches to 12-inches in diameter for larger industrial applications.

e. Private Fire Hydrant: A fire hydrant which is located on privately owned property, or on streets not dedicated to public use unless the watermain is within a public easement. Private fire hydrants must be served by a minimum of a 6-inch diameter pipe. A private fire hydrant is the responsibility of the property owner and is to be for fire protection only. Where it is the owner intention that these hydrants be used by the City Fire Department, these hydrants shall conform to the City's Design Standards. The City has the right to utilize the hydrants for flushing purposes.

4C-1 B. 4. Add the following sentence:

Watermains shall be constructed such that no services shall be extended beneath the paving of the circular turn-around of a cul-de-sac.

4C-1 D.1. Change the second sentence to read "300-feet" for both distances.

4C-1 E. 3. B. Change the first sentence to read "300-feet for both distances.
Change the third sentence of the second paragraph to read "300-feet" for both distances.

4C-1 E. 4. Add the following paragraph:
A fire hydrant shall be required at the end of all dead end lines. The locations of the fire hydrant may be modified at the request of the Jurisdictional Engineer or Fire Department.

4C-1 F. Add the following paragraphs and Table 4C-1.02:
No water consumer shall construct water service pipes across lots or buildings to adjoining premises, but all service pipes shall be laid within streets, alleys or public ground to the premises to be served, and enter at the front or rear of the building nearest the main. Such service pipe shall be laid in a straight line at right angles to the watermain within two lines extended from the sides of the building to be served, or not more than 3-feet outside of these lines. Service pipe must be either seamless annealed copper, Type K conforming to ASTM B-88, or Polyethylene 3408 as defined in current ASTM D 2239 and AWWA C-901, Polyethylene 200 psi rated pipe.

Service shut-off (curbstop) shall be located in or within 1-foot of the public right-of-way whenever possible. Curbstops shall not be within street, sidewalk, or driveway pavement whenever possible. Curbstops located outside of the right-of-way shall be located in an easement with ingress/egress rights for operation and maintenance of the service shut-off. Multiple stop boxes shall be permanently marked to identify the correct individual metered service.

Table 4C-1.02
WATER SERVICE CONNECTIONS (1)

Type	Number of Connections and Size of Service Pipe	Number of Meters and Billing Requirements
SINGLE FAMILY	1 –1"	1 Meter – 1 Curb Stop Individual Billing
DUPLEX OR ZERO- LOT LINE	2 – 1"	1 Meter for Each Unit, 2 Curbstops Individual Billing
TOWNHOUSE OR MULTIPLE SIDE- BY-SIDE APARTMENTS.	1 – 1" for each unit	All units must be plumbed for individual meters and curbstops.
MULTI-STORY APARTMENTS MAX. 6 UNITS	1 – 1" for each unit	All units must be plumbed for individual meters and curbstops.
MULTI-STORY APARTEMENTS 7 UNITS OR MORE)((	Requires City Engineer Approval. Must be sized for available main pressures and line distances. May require larger private service built to City standards.	All units must be plumbed for individual meters. Apartments or condominiums with specific by-laws may have single meter and Billing.
COMMERCIAL OR MIXED USE DEVELOPMENT**	Requires City Engineer Approval. Must be sized for available main pressures and line distances. May Require larger private service built to City standards.	All units must be plumbed for individual meter. Commercial and residential users must have separate meters and billing.

(1) All services shall be designed to accommodate available pressures in existing watermain, distances from the main to the user, and the City's fire protection requirements.

)((Apartment or condominiums with three habitable stories or any other structure with 9 or more dwelling units is required to provide a fire protection sprinkler system. This system must be designed in accordance with the City's Building Code requirements, and be approved by the City Engineer.

4C-1 N Add the following section:
N. Location of Easements
1. All watermains shall be located within the public right-of-way. In rare exceptions, dedicated easements may be used for location of watermain outside of the right-of-way.

2. The minimum easement width is 10-feet.

Chapter 5 Roadway Design

5A-1 C. Add the following subsection

C. Permits

State and federal permits may be required, depending on the circumstances. It shall be the responsibility of the Project Engineer to acquire all applicable permits. A copy of the permits shall be provided to the City prior to construction.

5B-1 F. Add the following section:

F. Industrial Streets

Industrial streets are intended to carry industrial traffic and service as a means of access to abutting industrial property.

5B-1 G. Add the following section:

G. Cul-de-sacs

Cul-de-sacs are placed at the end of streets to provide turn-around capabilities.

5C-1 E. Add the following section

E. Other Jurisdictional Requirements

1. Minimum Criteria

In general, roadway elements shall conform to SUDAS Design Standards, however, Table 5C-1.06, Minimum Criteria for Roadway Elements, shall apply.

2. Signage

Developers shall pay the City the costs of all initial street signage for all new developments. The costs shall be determined on a unit cost per sign basis for the type and number of signs required as determined by the City Engineer and approved by Council action.

5C-2 J. Add the following paragraph:

Variances to clear zone requirements will be considered for overhead electric facilities where compliance will significantly impact existing trees. In no case will a clear zone of less than 18-inches be allowed. A clear zone variance must be approved by the City Engineer. Every effort shall be made to eliminate sight obstructions within the right of way.

5C-2 L. Add the following as the third sentence in the first paragraph:

A slope of 1/4 inch per foot or 2% is preferable within the City of Tiffin especially near intersections to better manage ADA compliance.

5C-2 L. Add the following paragraphs:

1. In residential areas, the parkway shall be grassed except in such areas that the parkway is so narrow the grass does not grow well. In these narrow areas, the alternate materials described in paragraph 2 may be used upon approval of the City Engineer.

2. In commercial areas, alternate materials shall be used in the parkway upon approval of the City Engineer. These materials include exposed aggregate concrete, asphalt and bricks, or concrete pavers on an asphalt or concrete base.

Table 5C-1.06
Minimum Criteria for Roadway Elements

Design Standard	Arterial	Collector	Local	Industrial		Cul-de-sacs		
Minimum right-of-way width (3)	100'	80'	66'	66'		**Design Standard**	**Local**	**Industrial**
Minimum lane width	12'	12'	12'	12'		Minimum right-of-way radius	67.5'	75.0'
Auxiliary Lane	12'	12'	N/A	N/A				
Minimum pavement width (1)(4)	36'	36'	31'	34'		Minimum Bulb Paving Radius	50'	59'
Maximum grade	8%	10%	10%	8%		Maximum grade	8%	8%
Minimum grade	0.5%	0.5%	0.5%	0.5%		Minimum grade	0.70%	0.70%
Minimum pavement curve radius (5)	1,000'	350'	150'	150'		Minimum stem to bulb transition radius	50'	75'
Median Width (7)	16'	4' Paved 9' Grass	4' Paved 9' Grass					
Minimum pavement thickness (P.C.C.) (2) (6)	9"	8"	7"	8"		Minimum pavement thickness (P.C.C.)(2)	7"	8"
Minimum pavement thickness (A.C.C.) (2) (6)	10"	9"	8"	9"		Minimum pavement thickness (A.C.C.)(2)	8"	9"

(1) including curb and gutter

(2) may have additional granular subgrade requirements depending on existing soils and anticipated traffic conditions

(3) Additional width is required for medians or boulevards if they are planned within the right-of-way. This additional right-of-way shall be dedicated to the City by the Developer.

(4) A larger pavement width may be specified for roadways defined as Prescribed Roadways" in the City of Tiffin Access Regulation Ordinance.

(5) Under no circumstances will variances be granted for radii less than 75-feet.

(6) Pavement thickness and subgrade requirements are intended as a guide. Street projects shall be designed on the basis of soil conditions and the projected traffic loadings.

(7) Medians or boulevards which are included as a part of local or collector streets shall have a minimum width of 4-feet if paved of 9-feet if grassed. Paved medians on local and collector streets are discouraged, unless desired by the City at intersections. Raised medians are not allowed.

5I-3 C. 3. Add the following paragraphs

Access spacing shall be regulated by the City of Tiffin in the following manner:

A. Minor Arterial Roadways

The minimum distance between the centerlines of roadway access points shall be 300-feet. Driveways to individual lots abutting arterial roadways are prohibited unless the driveway provides access to/from a commercial or multi-family residential area with 18 or more dwelling units. A driveway access to these areas must be warranted by a traffic study and have concurrence by the Jurisdictional Engineer.

B. Collector Roadway

The minimum distance between centerlines of roadway access points shall be 125-feet. A maximum distance of 450-feet shall also be applied. A single driveway access will be allowed for each lot abutting a collector roadway. In the case of a corner lot, the driveway access must be to/from the street with the lower classification. One additional driveway access may be permitted if all of the following criteria are met.

1. The frontage length is greater than 150-feet.
2. The additional driveway is warranted by a traffic study.
3. Concurrence by the Jurisdictional Engineer.

Driveway access points should be coordinated to minimize turning conflicts.

C. Local Roadway

The minimum distance between the centerlines of roadway access points is 125-feet. A single driveway access shall be allowed for each lot abutting a local roadway. One additional driveway access may be permitted if the lot has frontage length greater than150-feet. Concurrence of the Jurisdictional Engineer s required.

D. Industrial Roadway

The minimum distance between the centerlines of roadway access points is 125-feet. A single driveway access shall be allowed for each lot abutting an industrial roadway. Additional driveway access point may be permitted based on projected traffic and concurrence of the Jurisdictional Engineer.

5N-1Add the following subchapter 5N-1:

5N-1 Alleys

A. Approvals and Permits,

1. Plans and specifications for public alley improvements must be reviewed and approved by the City Engineer prior to construction.

2. Local, state and federal permits may be required, depending on the circumstances. It shall be the responsibility of the Project Engineer to acquire all applicable permits. A copy of all permits shall be provided to the City prior to construction.

B. Alley Classification

1. A Residential Alley is a route located between local streets used primarily for access to the rear of residential property.

2. A Commercial Alley is a route located in commercial areas used primarily for access to the rear of commercial property.

C. Right-Of-Way Width

The right-of-way width shall be 20 feet for all alleys.

D. Pavement Width

1. Residential alleys shall have a minimum pavement width of 16 feet.

2. Commercial alleys shall have a minimum pavement width of 20 feet.

E. Alley Grades

The maximum grade for alleys shall be 8% for residential and 5% for commercial alleys. The minimum grade shall be 0.5% for all types of alleys.

F. Alley Pavement Cross Section

The pavement shall have a 4% inverted crown cross-section, or as approved by the City Engineer.

G. Pavement Material and Thickness

1. The pavement slab may be constructed of the following materials:

a. Non-reinforced Portland cement concrete conforming the IDOT specifications C-3 mix or M-3 mix as applicable.

b. Full depth asphaltic concrete hot mix conforming to the IDOT specifications for Type "B" base and Type "A" surface course.

2. Minimum alley pavement thickness:

	Residential	Commercial
Portland Cement Concrete	6"	7"
Asphalt Cement Concrete	7"	8"

H. Subgrade Requirements

The subgrade shall have the same requirement as local streets.

5O-1 Add the following subchapter 5O-1:

5O-1 Driveways, Entrances and Points of Access

A. Approvals and Permits

1. An access permit must be obtained before driveway construction or reconstruction work is done within the street right-of-way not associated with the construction of a new house or business for which a building permit has been obtained. However, the standards set forth in this document apply to all driveway construction. A sketch with dimensions shall be submitted showing the driveway in relation to intersections, side lot lines and other driveways.

2. A permit must be obtained from the Iowa Department of Transportation before placing or modifying a driveway within any state highway right-of-way.

3. Contractor must provide a Certificate of Insurance identifying the City as an "Additional Insured" party for the duration of the construction activity.

B. Traffic Control

1. The contractor doing the work is responsible for all traffic control and work site safety. If construction activities extend onto the street right-of-way, traffic control shall meet the standards for Work Zone Traffic Control defined in the current edition of the "Manual on Uniform Traffic Control Devices." Traffic control plans may be required.

2. The contractor shall provide adequate barricades and/or fencing to protect pedestrians continuously from the start of construction to the completion of work.

C. Driveway Material, Thickness and Finish

1. In Residential Zoning the driveway slab extending from the street to private property shall be constructed of Portland Cement Concrete conforming to the specifications of the Iowa Department of Transportation C-3 or M-3 mixes. The concrete driveway slab shall be a minimum of 6-inches thick.

2. All proposed Commercial or Industrial driveways must be hard surfaced from the street to the property line. Other driveway surfaces (ACC, seal coat, or special materials) may be approved, upon application to the City Engineer, contingent upon satisfactory compliance of all other requirements of this section, and any other conditions required by the City.

D. New and Replacement Culverts

1. New driveways constructed on streets without curb and gutter shall have culverts as approved by the City. Replacement of existing culverts must be approved by the City.

2. A written request for installation of a new or replacement culvert must be submitted to the City, and must be accompanied by a drawing that shows:

a. culvert dimensions, length, diameter, and culvert material

b. culvert location in relationship to property lines, street centerline and utilities

c. All culvert installations shall be reviewed and approved by the City Engineer.

d. All culverts must have a minimum diameter of 12-inches. All culverts must be constructed of either 2000D strength reinforced concrete pipe (RCP) or 10 gauge corrugated metal pipe (CMP).

3. Culverts are the responsibility of the property owner. The City accepts no responsibility for maintenance, repair, replacement, or procurement of contractors. Failure to install culverts in accordance with City requirements will result in removal and replacement at property owner's expense.

E. Curb Removal and Joint at Pavement

Curb drops shall be constructed as detailed in Figure 7030.102 of SUDAS Standard Specifications.

F. General Conditions for All Classifications of Driveways

The maximum driveway widths are listed in Table 5O-1.01. On lots with multiple frontages the major driveway shall be on the lower classified street. Some subdivisions may prohibit access onto the higher classification street. Check the subdivider's agreement and the City of Tiffin Access Regulation Ordinance in each case. The following minimum driveway separations will also apply.

1. There shall be a minimum of twenty (20) feet between the end of a radius of a street intersection and the beginning of a driveway curb cut as measured at the curb line in all instances. Additional distance between the radius of a street intersection and the beginning of a driveway curb cut may be required by the City Engineer where deemed necessary because of high traffic volumes or other safety concerns.

2, A six (6) foot minimum distance between curb cuts of adjacent entrances at the curb line will be required.

3. The curb return shall not be constructed closer than three (3) feet to the side property line extended.

Table 5O-1.01
Maximum Driveway Widths (6)

Zoning District	Frontage	Driveway Width		Number		Lanes and Medians		
	Type	@ Sidewalk	@ Curb	Allowed	In	Out Left	Out Right	Median Note 2
Single Family	Single	24'	30'	1				
	Single	12'	18'	2 max.				
	Shared	30'	36'	1				
	Double (1)	24'	30'	1				
			and					
		12'	18'	1				
Two Family	Separate	24'	30'	1/unit				
	Common	30'	36'	1				
All other Residential	Single	34'	42'	1/ Lot				
	Single	24'	32'	2/Lot max.				
	>150 feet	34'	42'	2/Lot				
	Double	34'	42'	3 max.				
Non-Residential	**Driveway**							
and Industrial	**Type (4)**							
(Shared Driveway)	"A"	45'	(3)	1	16'	12'	12'	4'
(Shared Driveway)	"B"	41'	(3)	1	16'	12'	12'	
Single Driveway	"C"	28'	(3)	1	14	1-14' lane out		
State Highway		(5)						

(1) For corner lot, major Driveway is required to be on the lower classified roadway.
(2). Median may be painted or raised with curb.
(3) Special design, radius returns may be required.
(4) Driveway Type generally follows IDOT Iowa Primary Highway Access Management Policy.
(5) Entrance design governed by IDOT Iowa Primary Highway Access Management Policy.
(6) Distances may be varied by the City Engineer in certain instances in the existing developed areas of the City, as necessary.

G. Driveway Grades

Figure 5O-1.07 shows a typical roadway cross-section at an entrance.

Figure 5O-1.07

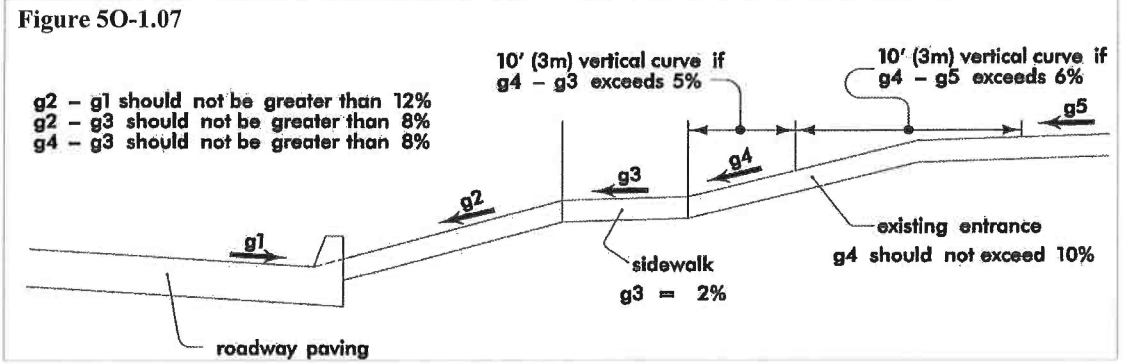

Figure 5M-1.08 shows a typical design vehicle for driveway design.

The information in this paragraph should be used as a guide for driveway design. In all cases, Figure 7030.103 of the SUDAS Standard Specification shall apply. The entrance profile (g2) should slope upward (positive grade) from the gutter line to the curb side of the sidewalk (if present) with a maximum algebraic difference of 15% between the cross slope of the traveled way (g1) and the positive slope of the driveway (g2). Vertical curves should be used if g4-g3 exceeds 5% or if g4-g5 exceeds 5%. The designer should check the entrance profile with a template similar to Figure 5L-1.08 to ensure ample vertical clearance between the driveway surface and the underside of the design vehicle in the maximum range. The designer should also consider any special vehicles that may use the entrance, such as limousines or campers, to ensure ample vertical clearances exist for these vehicles.

Figure 5O-1.08

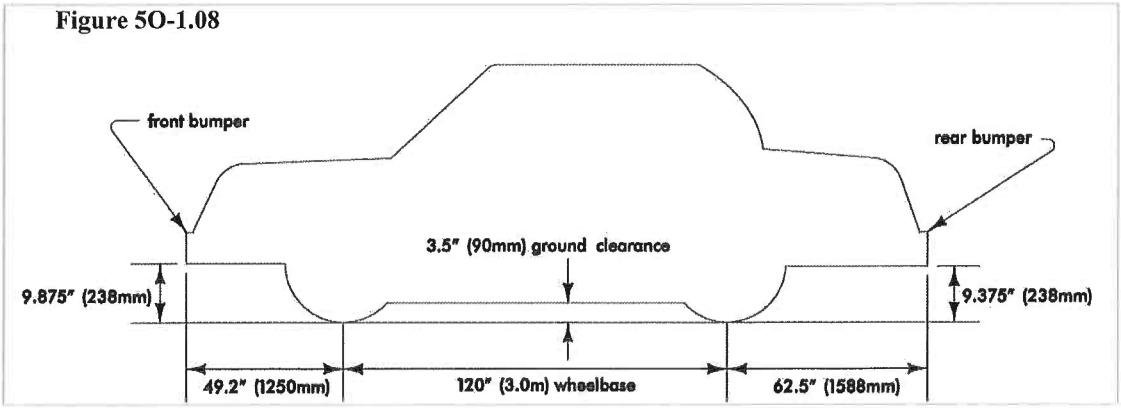

All entrances in urban settings should be paved to prevent aggregate from washing onto the pavement, curb, and gutters. If the existing drive is not paved, pave the first 10 feet from the back of curb or to the edge of the existing sidewalk.

All entrances should be constructed so as not to impair drainage within the highway right-of-way nor alter the stability of the highway subgrade and at the same time not impair or materially alter drainage

of the adjacent areas. All culverts, catch basins, drainage channels, and other drainage structures required under driveways as the result of property being developed should be installed in accordance with current standards and specifications.

Chapter 6 Geotechnical

6E-1 G. Add the following subsection:

J. Other Jurisdictional Requirements

All roadways, streets, alleys shall be designed with engineered subgrade. As a minimum, the top 6-inches of the subgrade shall be scarified and re-compacted to 95% standard proctor density. Additional compaction may be required based on soil conditions and expected traffic volumes. Soil amendment may also be required.

6F-1 J. Add the following subsection:

J. Other Jurisdictional Requirements

All paved roadways, streets, alleys and driveways shall be designed with either Granular Subbase (IDOT Gradations 12) or Modified Subbase (IDOT Gradation14) with a minimum thickness of 6-inches. Additional thickness may be required based on soil conditions and expected traffic volumes.

6G-1 H. Add the following subsection:

H. Other Jurisdictional Requirements

All roadways, streets, and alleys shall be designed with subsurface drainage systems.

Chapter 7 Erosion and Sediment Control No amendments

Chapter 8 Parking Lots

8C-1 G. Add the following subsection:

G. Other Jurisdictional Requirements

The installation of all parking shall comply with the standards described herein as well as the requirements of the Zoning Ordinance. All required parking shall be provided on private property. On-street parking may not be counted for meeting the parking requirements listed in the Zoning Ordinance.

These standards are intended to serve as a supplement to the regulations located in the City of Tiffin Zoning Ordinance. The Zoning Ordinance regulations include, but are not limited to, provisions for: the required number of parking spaces for a particular use, the parking of recreational vehicles, and the use of off-street parking. The City of Tiffin Zoning Ordinance should be consulted in conjunction with these Design Standards.

1. **Required Landscaping for Off-Street Parking**

   All off-street parking areas for multiple-unit residential and commercial projects shall receive landscaping, both around their perimeter and within the interior of the parking lot, according to the following standards.

2. **Landscaping Requirements**

   All required front setback areas shall be landscaped except for driveways. All parking spaces and back-up areas, except for driveway parking for single-family dwellings, shall be located behind the required front yard setback.

   All parking areas shall provide a minimum five-foot landscape planting area around the perimeter of the parking, except for driveway access. Landscape planting areas shall be widened to accommodate vehicle overhand, resulting in 8'-0" width adjacent to standard spaces. Only low

level shrubs and groundcover shall be used in vehicle overhang areas. Perimeter landscaping shall be used to screen the parking lot from the public view by the use of shrubs and/or decorative mounding to an effective height of 3.5 feet and shall utilize street trees at the ratio of 1 tree per 40 feet of street frontage.

All interior landscaping planting areas shall provide trees selected to provide shade canopies with a minimum diameter of ten feet at maturity.

The amount of required interior parking lot landscaping may be reduced by the Planning and Zoning Commission when the following findings are made:

a. It effectively mitigates the visual impact of a broad expanse of pavement through careful placement of trees and other vertical elements such as vines and landscaped banks.
b. It helps promote safe traffic circulation.
c. It is provided in an area large enough to ensure its survival.

All landscaping (perimeter and interior) shall be separated from the parking pavement by a continuous 6-inch Portland cement concrete curb.

3. Security Lighting
Lighting shall be provided in all parking areas to provide an adequate level of security.

All lighting shall be screened so that it does not illuminate adjacent properties. In general, light bulbs should not be directly visible from any adjoining residential property.

Chapter 9 Utilities

9D-1 E. Add the following subsection E:
E. Other Jurisdictional Requirements
1. Work Around Trees
a. Use care to prevent work within the drip line of trees.

b. When work falls within the drip line of trees, contact the City Hall.

2. Restoration of Pavement Surface
Follow SUDAS Section 7040.

3. Other Surfaces
All areas outside the pavement which are disturbed shall be restored to their original condition.

When approved by the governing authority, unimproved streets (rock or rock and oil, seal coated streets) may be repaired or restored with Bituminous Seal Coat consisting of one or more applications of Binder Bitumen with one or more successive applications of cover aggregate. Materials, Equipment and Construction methods shall be in general conformity with Section 2307 of the current Iowa Department of Transportation Standard Specifications for Highway and Bridge Construction.

Chapter 10 Street Tree Criteria No amendments

Chapter 11 Street Lighting

11C-1 D. Add the following subsection D:
D. Other Jurisdictional Requirements

1. Light Fixture Spacing
At a minimum, light fixtures shall be placed at intersection and at mid-block. Additional fixtures are required at intervals that allow for continuous lighting along the sidewalks of the block.

Contact City Hall for a list of approved lighting fixtures.

Chapter 12 Sidewalks and Bicycle Facilities

12A-1 E. Add the following subsection E:

E. Other Jurisdictional Requirements

1. Width and Location

a. Sidewalk and trail widths shall be a function of Street Classification (see Section 5 for definitions of road designations), expected use, and Zoning.

b. Sidewalks in the public right-of-way shall be located 1-foot from the property line, except in areas in which a different offset is required to match existing walks or where topographical constraints exist.

c. Sidewalks that extend to the street perpendicular to the curb shall only be located at intersections, cluster mailbox locations, and designated mid-block crossings. Such perpendicular sidewalks in other locations removed for construction or maintenance activities shall not be replaced.

d. Sidewalks are required on both sides of all streets, except in Industrial Zoning.

2. Matching Existing Walks

a. The width and location of a new sidewalk shall match the width and location of existing sidewalks in the area. However, the sidewalk width shall not be less than 5 feet (no tapers allowed).

b. Sidewalk cross slope may be varied through a gradual transition to match existing adjoining walks. Contact City Hall if existing adjoining walks vary significantly from existing standards.

Chapter 13 Traffic Signals No amendments

Chapter 14 Trenchless Construction No amendments

Chapter 15 Miscellaneous No amendments

Chapter 16 Fencing Add the following as Chapter 16 Fencing:

16A-1 A. Fencing Requirements

1. At the time of approval of the final plat, the Subdivider of any subdivision which has a boundary abutting land used for agricultural purposes shall agree to be responsible for the construction and maintenance of all fences between the subdivision and all land used for agricultural purposes. A required fence shall consist of either:

a. Not less than 26 inches of substantial woven wire on the bottom with three strands of barbed wire with not less than 36 barbs of at least 2 points to the rod on top; the top wire to be not less than 48 inches, nor more than 54 inches high; or

b. Good substantial woven wire of not less than 48 inches nor more than 54 inches high, with one barbed wire of not less than 36 barbs of 2 points to the rod, nor more than four inches above said woven wire.

These fence construction standards shall be considered the minimum standard to be required by agreements pursuant to this article.

2. The Subdivider shall satisfy the following conditions regarding fences:

a. At the time of submittal of the final plat, the Subdivider shall submit a Subdivider's Agreement with the City that sets forth provisions for fence agreements with the owners of property adjoining the land included in the final plat. The fence agreement will specify the responsible party of fence construction and maintenance.

b. Required fence agreements shall at a minimum, contain the following:

1.) A statement that the agreement shall be binding on both parties, their heirs, and assigns.

2.) A statement that the agreement shall run with the land.

3.) A termination clause effective upon the subdivision of the adjoining property for non-agricultural purposes.

3. Prior to approval of the final plat, the subdivider shall submit copies of the recorded fence agreements with the owners of property adjoining the final plat. Where the owner of property adjoining the plat shall fail to enter into said fence agreement the City of Tiffin may nevertheless approve the final plat after the following condition has been satisfied:

a. The Subdivider's Agreement with the City states that the Subdivider is the sole responsible party for fence construction and maintenance for all fences abutting land used for agricultural purposes.

The Statewide Urban Design and Specifications (SUDAS) Standard Specifications Manual shall be adopted with the following amendments:

Division 1 – General Provisions and Covenants
Section 1020 – Proposal Requirements and Conditions

Article 1.09 A. Add the following subparagraphs paragraphs 1-3

1. Proposals shall be prepared on the exact colored copy of the "Form of Proposal" included in these specifications as provided by the Engineer. All applicable blank spaces shall be filled in, typewritten or in ink. If unit price and extension are in conflict, unit price shall govern. All boxes shall have numbers in the unit or it shall be considered a zero bid.

2. Proposals shall indicate the full name of Bidder, shall be signed in the firm or corporate name of the bidder, and shall bear the longhand signature of a principal duly authorized to execute contracts for the bidder. Proposals signed by an agent of the bidder must be accompanied by evidence of the agent's authority to execute contracts for the bidder. The name of each person signing the proposal shall be typed or printed below the signature.

3. All erasures or corrections shall be initialed by the person signing the proposal.

Article 1.15 A. Change sentence to read "90 calendar days."

Section 1030 Approval for Award and Award of Contract

Article 1.03 B. Add the following subparagraphs 1-2

1. Targeted Small Business (TSB) Contract Provisions (if applicable)

2. State Revolving Fund (SRF) Requires Front-End Specifications (if applicable)

Section 1070 Legal Relations and Responsibility to the Public

Article 3.01 B. Add the following as the second paragraph
The duration of the bond shall be three (3) years.

Article 3.02 C. 6. The Engineer shall also be listed as an additional insured

Article 3.05 M. The "Installation Floater" is not required for grading and paving portions of the contract.

Division 4 - Sewers and Drains
Section 4010 Sanitary Sewers

Article 1.08 A. 1. c. Make the following change
1.08. A.1.c. Sanitary Service Wyes will be paid as a separate item. Each type and size of wye installed as specified in the contract documents will be counted. Payment will be made at the unit price for each type and size of wye. Unit price includes but is not limited to all equipment, labor, and materials necessary to install sanitary service wye in accordance with the Plans and Specifications. Cleaning, Inspection and Testing will be paid as a separate item. See Section 4060.

Section 4060 Cleaning, Inspection and Testing of Sewers

Article 1.08 Make the following change
1.08 Measurement and Payment

Cleaning, Visual Inspection, Low Pressure Air Testing, and Deflection Testing will be required. Inspection and Testing will be paid at the unit bid price. Video inspection may be required, at the direction of the Engineer, if other testing fails. Costs associated with video inspection shall be incidental to the Cleaning, Inspection, and Acceptance Testing item.

Division 5 – Water mains and Appurtenances
Section 5010 Water mains and Appurtenances

Article 1.08 C Make the following changes to Article 1.08 C
1.08 C. 1.a. Measurement
Each Fitting(tee, bend, reducer, sleeve, cap, etc.) installed as specified on the plans, Contract Documents, or as required for proper installation of the water main will be counted regardless of size.
1.08 C. 1. b. Payment
Payment will be made at the contract unit price for each fitting installed.

Article 2.03Add the following statement
Preferences will be made for domestically made products and materials.

Article 2.07 C Add the following Jurisdictional Requirements
2.07 C. Corporations, Stops, and Stop Boxes
Corpstop shall be A.Y. McDonald #4701, #4701B, or approved equal.
Curbstops shall be A.Y. McDonald #6100, or approved equal.
Stop boxes shall be A.Y. MCDONALD #5607L with stainless steel operating rod, or approved equal. Stop box cap shall have removable brass access plug.
Preferences will be made for domestically made products and materials.

Article 3.06 H. Add the following Jurisdictional Requirements
H. The above tracer wire system requirements shall also apply to water service piping. Tracer wire shall be installed with the service piping from the water main to the building that is being served. Tracer ware shall be tied into the tracer wire system of the watermain.

Section 5020 Valves, Fire Hydrants, and Appurtenances

Article 1.08 Make the following changes
1.08 A. Valve (Butterfly or Gate)
1.08 A.3 Includes:
Unit price also includes furnishing all labor, materials, and equipment necessary to install Valves Box Adaptor II, manufactured by Adaptor Inc., or approved equal, with all proposed valve boxes.

1.08 B. Tapping Valve Assembly
1.08 B.3 Includes:
Unit price also includes furnishing all labor, materials, and equipment necessary to install Valves Box Adaptor II, manufactured by Adaptor Inc., or approved equal, with the valve box.

1.08 C. Fire Hydrant Assembly
1.08 C.3 Includes:
Unit price also includes furnishing all labor, materials, and equipment necessary to install Valves Box Adaptor II, manufactured by Adaptor Inc., or approved equal, with the valve box.

1.08 G. Valve Box Replacement
1.08 G.3 Includes:
Unit price also includes furnishing all labor, materials, and equipment necessary to install Valves Box Adaptor II, manufactured by Adaptor Inc., or approved equal, with all replaced valve boxes.

Article 2.01 B. 4. Add the following article

4. Gate Valves shall be American Flow Control Series 2500, Clow Figure F6100, Mueller Series 2360, or approved equal. Preferences will be made for domestically made products and materials. All valves shall be resilient wedge gate valves with mechanical joints, 2-inch square operating nut, open counter-clockwise, and 3-foot stem extensions.

Article 2.02 C. 6. a. - d. Substitute the following for the specified items

a. 1 ½-inch pentagon operating nut, open counter-clockwise.
b. 5-inch integrated Storz hose coupling pumper nozzle.
c. Nozzles shall have National Standard Hose threads.
d. 5 ¼-inch main valve opening.

Article 2.02 C. 7. Add following Article

7. Proposed hydrants shall be 5 ¼-inch Waterous Pacer (WB67), Clow Medallion, or approved equal and painted Silver in color with Red caps. Preferences will be made for domestically made products and materials.

Hydrants shall be oriented such that the pumper nozzle faces the street, or if at intersection, faces the higher classification street.

Article 2.03 Add the following as 2.03 D.

2.03 D. Valve Box Adaptor

Valve Box Adaptor II, manufactured by Adaptor Inc., or approved equal, shall be installed between the valve body and valve box per manufacturer's recommendations.

Section 5030 Testing and Disinfection

Article 1.08 Make the following change

1.08 Measurement and Payment

Testing and disinfection of water mains will be paid at the Lump Sum unit price established by the Contract.

Division 6 – Structures for Sanitary and Storm Sewers

Section 6010 Structures for Sanitary and Storm Sewers

Article 1.08 A. 3. Make the following change

1.08. A.3. Each type of Chimney Seal will be counted by the Engineer. Payment will be at the unit bid price for each type of Chimney Seal installed. Unit price includes but is not limited to furnishing all equipment labor and materials necessary to install the type of Chimney Seal per manufacturer's recommendations and as shown on the Plans.

Add figure 6010.308

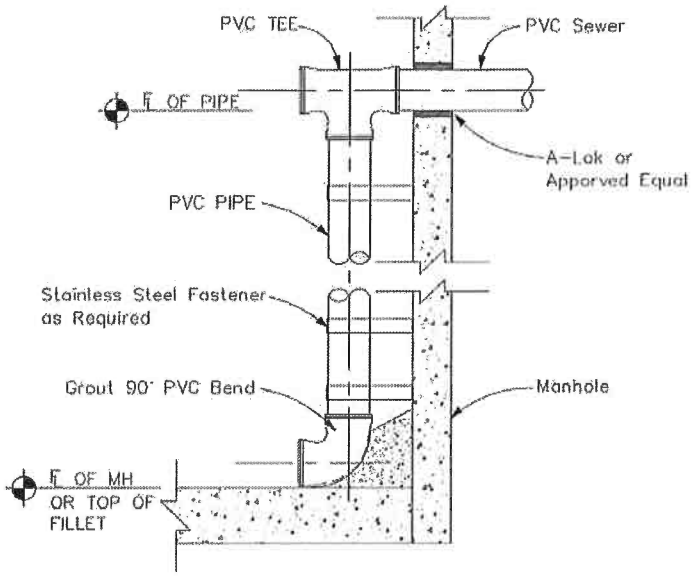

INTERNAL SANITARY DROP CONNECTION

FIGURE 6010.308

Division 7 – Streets and Related Work
Section 7030 Sidewalks, Shared Use Paths, and Driveways

Article 1.08 A. 1. Make the following change
1.08. A.1. Measurement:

Measurement will be in square yards. No Deduction in area will be made for manholes, storm sewer intakes, valve boxes, or other structures less the 2 square yards in area. The maximum payable trench width for trenched utility work shall be computed based on pipe diameter and depth of cut. Refer to Table 3-3 for maximum payable trench widths. Pavement removal outside of the maximum trench width will not be measured for payment unless directed by the Engineer. Pavement removal for patching is included as part of the patching item and will not be measured separately.

Section 7040 Pavement Rehabilitation

Article 1.08 H. 1. Make the following change

1.08. H.1. Measurement:

Measurement will be in square yards. No Deduction in area will be made for manholes, storm sewer intakes, valve boxes, or other structures less the 2 square yards in area. The maximum payable trench width for trenched utility work shall be computed based on pipe diameter and depth of cut. Refer to Table 3-3 for maximum payable trench widths. Pavement removal outside of the maximum trench width will not be measured for payment unless directed by the Engineer. Pavement removal for patching is included as part of the patching item and will not be measured separately.

The Statewide Urban Design and Specifications (SUDAS) Standard Specifications Manual shall be adopted with the following additions:

Traffic Control: Complete; Lump Sum (LS);

The Contractor shall accommodate and maintain access to all residential and commercial properties, unless approved by Engineer and Property Owner/Residents when not practical to do such until the construction activity has been completed. All traffic control shall be in accordance with the Iowa Department of Transportation Standard Specifications for Highway and Bridge Construction, Series 2015 (current revision) and the Manual on Uniform Traffic Control Devices (MUTCD). The contractor shall erect and maintain construction and warning signage, barricades, fencing, and delineating devices to ensure the safety of the traveling public through and around the jobsite. Contractor shall cover all permanent signage that is in conflict with or displays information that is contradictory to the construction signage. Unit price includes but is not limited to furnishing all labor, materials and equipment necessary to furnish, install, erect, maintain, move, and remove construction and warning signage, in accordance with the Plans, of Iowa Department of Transportation Standard Specifications for Highway and Bridge Construction, Series 2012 (current revision) and MUTCD, assuring safe traffic flow.

Light Poles, Electrical Circuits, Handholes & Junction Boxes (Highway Lighting)

In general Light Poles, Electrical Circuits, Handholes and Junction Boxes shall be in accordance with Section 2523 of Iowa Department of Transportation Standard Specifications for Highway and Bridge Construction, Series 2015 (current revision).

All materials shall meet the City Design Standards.

Light poles shall consist of a wooden pole of sufficient length such that the mounting of the luminaire is not less than 26 feet or more than 30 feet above the roadway surface.

Mast arm shall be galvanized steel.

Lighting fixture shall contain an LED light source with a minimum of 8,500 lumens (ASA, Type III) and shall meet Illumination Engineering Society (IES) Type II "sharp cutoff" lighting criteria (limited "fugitive light" and direct downward illumination).

TABLE 3-3 SURFACE REPLACEMENT QUANTITIES

PAY WIDTH LIMIT IN FEET AT TOP OF TRENCH SECTION FOR SURFACE REPLACEMENT QUANTITIES PER LINEAL FOOT

PIPE DIAMETER		CUT IN FEET TO INVERT										
WATER	SEWER	4	5	6	7	8	9	10	11	12	13	14
4" & 6"	4"	6.62	7.62	8.62	9.62	10.62	11.62	12.62	13.62	14.62	15.62	16.62
8"	6"	6.44	7.44	8.44	9.44	10.44	11.44	12.44	13.44	14.44	15.44	16.44
10"	8"	6.59	7.59	8.59	9.59	10.59	11.59	12.59	13.59	14.59	15.59	16.59
12"	10"	6.42	7.42	8.42	9.42	10.42	11.42	12.42	13.42	14.42	15.42	16.42
14"	12"	6.40	7.40	8.40	9.40	10.40	11.40	12.40	13.40	14.40	15.40	16.40
16" & 18"	15"	6.38	7.38	8.38	9.38	10.38	11.38	12.38	13.38	14.38	15.38	16.38
20"	18"	6.34	7.34	8.34	9.34	10.34	11.34	12.34	13.34	14.34	15.34	16.34

PIPE DIAMETER												
WATER	SEWER	15	16	17	18	19	20	21	22	23	24	25
4" & 6"	4"	17.62	18.62	19.62	20.62	21.62	22.62	23.62	24.62	25.62	26.62	27.62
8"	6"	17.44	18.44	19.44	20.44	21.44	22.44	23.44	24.44	25.44	26.44	27.44
10"	8"	17.59	18.59	19.59	20.59	21.59	22.59	23.59	24.59	25.59	26.59	27.59
12"	10"	17.50	18.50	19.50	20.50	21.50	22.05	23.50	24.50	25.50	26.60	27.50
14"	12"	17.50	18.50	19.50	20.50	21.50	22.50	23.50	24.50	25.50	26.50	27.50
16" & 18"	15"	17.50	18.50	19.50	20.50	21.50	22.50	23.50	24.50	25.50	26.50	27.50
20"	18"	17.50	18.50	19.50	20.50	21.50	22.50	23.50	24.50	25.50	26.50	27.50

Anamosa

CHAPTER 167

SITE PLAN AND LANDSCAPING PLAN REVIEW AND REGULATIONS

167.01 Purpose
167.02 Definitions
167.03 Site Plan Review Committee
167.04 Status of Zoning Compliance Applications
167.05 Storm Water Management Plan
167.06 Traffic Analysis
167.07 Scope of Site Plan Review
167.08 Site Plan Approval
167.09 Relationship of Site Plan Review to the Zoning Regulations
167.10 Forms and Fees
167.11 Contents of Site Plan – Graphic
167.12 Contents of Site Plan – Written
167.13 Residential Dwelling Standards
167.14 Building Standards
167.13 Purpose of Landscape Plan Review
167.14 Landscape Plans Required
167.15 Landscape Design Elements
167.16 Minimum Tree Coverage
167.17 New Plant Material
167.18 Maintenance
167.19 Completion of Landscaping
167.20 Enforcement
167.21 Recommended Trees
167.22 Shrubs

167.01 PURPOSE. In order to further promote the safe and efficient use of land and to further enhance the value of property in the City of Anamosa, Iowa, the City Council deems it advisable to establish a Site Plan Review Process for any construction of two thousand five hundred (2,500) square feet or more; or which brings existing gross floor area to 2,500 square feet or more, for which a Construction/Development Permit is required, except for construction of single-family and two-family residential structures or structures accessory thereof. However, Section 167.13 of this ordinance will still apply to single-family and two-family residential structures or structures accessory thereof. Site Plan Review is also required for any parking lot construction of eight (8) or more parking spaces. This review is intended to supplement the review and administrative procedures which are carried out under other City policies or ordinances. The Site Plan Review Process is intended to help ensure that newly developed properties or redeveloped properties are compatible with adjacent development and that safety, traffic; over-crowding and environmental problems are minimized to the extent possible. The Site Plan must include landscaping plans as required by landscaping regulations within this chapter. No Construction/Development Permit shall be issued until Site Plan approval is obtained where applicable. Site Plan Review will also apply to all areas within two miles of the corporate limits of the City, where such development will have an impact on the City's traffic or waterways.

167.02 DEFINITIONS. For the purpose of this chapter, all words defined herein are in addition to all words defined in Chapter 165 (Zoning) of this Code of Ordinances:

1. "Berm" means an earthen mound designed to provide visual interest, screen undesirable views, and/or decrease noise.

2. "Deciduous trees" are generally those trees which shed their leaves annually, such as Ash, Sycamore, Willow, etc.

3. "Evergreen trees" are generally those trees which do not shed their leaves annually, such as Pine, Spruce, Juniper, etc.

4. "Grass, native" means any species of perennial grass other than those designated as noxious weeds by the State of Iowa, Department of Natural Resources.

5. "Grass, turf" means a species of perennial grass grown as permanent lawns or for landscape purposes as distinguished from those species grown for agricultural or commercial seed purposes.

6. "Ground cover" means landscape materials, or living low growing plants other than turf grass, installed in such a manner so as to form a continuous cover over the ground surface.

7. "Landscape easement" means that portion of land dedicated to the City in residential zoning districts by the owner of the property for planting and maintenance of required street trees.

8. "Landscape material" consists of such living material as trees, shrubs, ground cover/vines, turf grasses, and non-living material such as: rocks, pebbles, sand, bark, brick pavers, earthen mounds (excluding pavement), and/or other items of a decorative or embellishment nature such as fountains, pools, walls, fencing, sculpture, etc.

9. "Landscaped buffer" means an area of landscaping separating two (2) distinct land uses, or a land use and a public right-of-way, and acts to soften or mitigate the effects of one land use on the other.

10. "Landscaped open spaces" means all land area within the property lines not covered by building or pavement.

11. "Landscaping" means the modification of the landscape for an aesthetic or functional purpose. It includes the preservation of existing vegetation and the continued maintenance thereof together with grading and installation of minor structures and appurtenances.

12. "Large trees" generally include those species of trees that reach a height of fifty (50) feet or taller at maturity.

13. "Medium trees" are generally thirty-five (35) to fifty (50) feet in height at maturity.

14. "Multi-family structures" means any structures with three (3) or more dwelling units.

15. "Screen" means an area of planting which provides an effective visual barrier.

16. "Shrubs" means any self-supporting, woody plant of a species, which normally grows to an overall height of less than fifteen (15) feet in this region.

17. "Small trees" are generally thirty-five (35) feet or less in height at maturity, including ornamental flowering trees and "patio" trees.

18. "Street tree planting area" means the area of development site that lies between the street right-of-way line and the edge of the street curb parallel to the street. This land is publicly owned but is often used for street tree planting and maintenance.

19. "Street tree" means any tree located within the City right-of-way or landscape easement on either side of all streets, avenues, or ways, or within fifteen (15) feet of the street pavement in a development with private streets (as described in Chapter 150 of this Code of Ordinances).

20. "Trees" means any self-supporting, woody plant of a species that normally grows to an overall minimum height of ten (10) feet in this region.

21. "Yard tree" means any tree which is not a street tree as defined in the appropriate subsection.

167.03 SITE PLAN REVIEW COMMITTEE. The review of Site Plans will consist of administrative review by the Zoning Administrator and the Director of Public Works. Said review will be forwarded onto the City Council for approval.

167.04 STATUS OF ZONING COMPLIANCE APPLICATIONS.

1. Except for those residential structures previously noted, every application for a Construction/Development Permit for new construction of gross floor area of two thousand five hundred (2,500) square feet or more, or which brings existing gross floor area to 2,500 square feet or more, excluding basements, shall be forwarded to the Development and Construction Committee along with the Zoning Administrator's review recommendation for the Committee's review. Further, where multiple Construction/Development Permits are requested for new construction, the total of which exceeds two thousand five hundred (2,500) square feet, a Site Plan shall also be required. The application for a Construction/Development Permit for construction or reconstruction that has as part of that Permit a parking lot containing eight (8) or more parking spaces shall submit a Site Plan for review. Application for Construction/Development Permits for construction or reconstruction of single-family or two-family residential structures or structures accessory thereto shall not be subject to the Site Plan Review.

2. Any development on a site of two (2) acres or more in size shall have a storm water management plan and traffic analysis included in their Site Plan.

167.05 STORM WATER MANAGEMENT PLAN. Those developments that are applicable under this section of the Code shall be required to retain/detain storm water run-off on their site with a controlled outlet. Water shall not flow from the site at a rate greater then what was there prior to the development or not greater then what standards are adopted by the City Council or in absence thereof, the City Engineer's recommendation. Storm Water Management Plan should be compatible with Plan as submitted with Preliminary and/or Final Plat.

167.06 TRAFFIC ANALYSIS. Traffic analysis shall include:

1. Projected number of trips estimated for daily and peak traffic levels.
2. Projected traffic flow patterns.
3. Impact on traffic upon abutting roads in relation to their capacity.
4. Combined traffic impact of approved but not yet constructed projects within the City.

If, in the Committee's judgment, the Construction/Development Permit application does not contain sufficient information to enable the Committee to properly discharge its responsibilities, the Committee may request additional information from the applicant. No Construction/Development Permit shall be issued by the Zoning Administrator until Site Plan approval has been granted, either by the Committee or by the City Council, as provided in this chapter.

167.07 SCOPE OF SITE PLAN REVIEW. The Construction and Development Committee, when evaluating Site Plans, will review:

1. Traffic and parking layout so as to:
   - A. Minimize dangerous traffic movements.
   - B. Achieve efficient traffic flow.
   - C. Provide for the optimum number of parking spaces and loading area, while maintaining City design standards.
   - D. Separate loading/delivery areas from pedestrian movement where possible.
   - E. Separate parking from access drives if possible.
   - F. Each lot shall have sufficient access for emergency vehicles.

G. Site to site access along cross access easements and/or frontage roads should be provided where feasible so as to minimize curb cuts.

2. Landscaping, so as to:

A. Maintain existing mature trees and shrubs, that are listed with the City's recommended trees and shrubs list, to the maximum extent practicable.

B. Buffer adjacent incompatible uses; size of the buffer:

(1) Size of buffer (living material) between Commercial and Residential – no less than 50 feet wide.

(2) Size of buffer (living material) between Commercial and Industrial – no less than 50 feet wide.

(3) Size of buffer (living material) between Industrial and Residential – no less than 100 feet wide.

Use of manmade screening (i.e., fence) along with living material may reduce the widths between the uses. Width of buffers may be adjusted depending on material used, both manmade and living. Plantings shall not be any less than specified in "New Plant Material" Section for medium and long deciduous, conifer and upright evergreens.

C. Screen unsightly activities from public view; this may be living or manmade screening. If the screen is manmade, it should be architecturally integrated into the design of the building.

D. Break up large expanses of paving with plant material. Shade trees must be from City's approved list, shall be planted along commercial arteries and within commercial development areas where possible. Within parking lots there should be at least one landscaped island equal to the size of a parking space for every 20 parking spaces provided. A site plan may combine islands into fewer larger islands.

E. Provide an aesthetically pleasing landscaping design including around all ground signs.

F. Provide hardy plant materials and landscaping designs that can withstand Anamosa's climate.

G. All required landscaping shall be maintained in proper condition and replaced when necessary.

3. Specific District Guidelines. The following guidelines shall apply when practical and reasonable in each case being considered by the Committee:

A. Commercial Development.

(1) Separate parking for service vehicles from shoppers' cars.

(2) Screen service/loading area from adjacent residential development and public right-of-way.

(3) Put signs and light poles in landscaped areas where possible.

(4) Require stacking room at driveway/street intersection where possible.

(5) Separate buildings from pavement with landscaping and/or walkways.

(6) Create a landscape setback between road and parking. New developments within a C-2 or Industrial Zonings, landscaping shall be required and setback at least 5 feet from right-of-way.

(7) Make retention ponds an open space asset.

(8) Require that lighting stays upon the property in a pleasing compatible manner.

B. Industrial Development.

(1) Create a landscape setback or screening between road parking.

(2) Make retention ponds an open space asset.

(3) Require landscaping in front of fence screening of outdoor storage.

(4) Require design of large planted medians at park entry.

(5) Discourage dogleg intersections.

(6) Screen and berm from adjacent non-industrial uses and zoning districts.

(7) Require that lighting stays upon the property in a pleasing compatible manner.

167.08 SITE PLAN APPROVAL. If the Anamosa City Council approves the Site Plan submitted to them, a Construction/Development Permit may then be issued, provided that all other requirements of all other applicable City codes and ordinances are satisfied.

167.09 RELATIONSHIP OF SITE PLAN REVIEW TO THE ZONING REGULATIONS. The procedures prescribed by these guidelines are not intended to be a substitute for, or to have any bearing upon, any procedures required under the Zoning Regulations of the City. If a proposed Site Plan involves the granting of a Special Exception or a Variance from the requirements of the Zoning Regulations, the Development and Construction Committee may review the Plan in advance of the Zoning proceedings and may make findings on the assumption that the Special Exception or Variance will be granted. However, such findings shall not constitute a position by the City or by any employee of the City in support of the petitioner's application for a Special Exception or a Variation and shall not be received in evidence in any proceedings before the Zoning Board of Adjustment. The report of the Development and Construction Committee in such cases shall be submitted to the Board of Adjustment concurrently with the application.

167.10 FORMS AND FEES. Application forms for Site Plan Review shall be established. All applications shall be filed in duplicate. One (1) copy shall, upon completion of review, be returned to the applicant and one (1) shall remain in the records of the City. Fees for Site Plan Review applications shall be established by Resolution of the Anamosa City Council.

167.11 CONTENTS OF SITE PLAN – GRAPHIC. The Site Plan shall include one (1) or more appropriately scaled maps or drawings of the property clearly and accurately indicating the following:

1. Complete property dimensions.

2. The location, grade and dimensions of all present and/or proposed streets ROWs, easements, utilities, lighting or other paved surfaces and engineering cross-sections of proposed new curbs and pavement. This requirement may be waived by the Zoning Administrator if found to be unnecessary.

3. Complete parking and traffic circulation plan, if applicable, showing location and dimensions of parking stalls, dividers, planters or similar permanent improvements; and perimeter screening treatment, including landscaping.

4. Location and full dimensions of all buildings or major structures, both proposed and existing, showing exterior dimensions, number and area of floors, location number and type of dwelling units, and height of buildings.

5. Existing and proposed contours of the property taken at regular contour intervals not to exceed five (5) feet, or two (2) feet if the Zoning Administrator determines that greater contour detail is necessary to satisfactorily make the determinations required by these regulations. This requirement may be waived by the Zoning Administrator if found to be unnecessary.

6. The general nature, location and size of all significant existing natural and manmade land features, including but not limited to, sidewalks, tree or bush masses, all individual trees over four (4) inches in diameter, grassed areas and soil features, terraces, and all streams or other permanent or temporary bodies of water.

7. A location map or other drawing at appropriate scale showing the general location and relation of the property to surrounding areas, including, where relevant, the zoning and land use pattern of adjacent properties, and existing street system in the area and location of nearby public facilities. This requirement may be waived by the Zoning Administrator if found to be unnecessary.

8. Additional graphic information as may be required by the Zoning Administrator to make determinations required by these regulations.

167.12 CONTENTS OF SITE PLAN – WRITTEN. All Site Plans shall include a report or narrative containing the following:

1. Legal description and address of the property.

2. Name, address and phone numbers of the property owners.

3. Name, address and phone numbers of the developers or contractors, if different than the owners, if available.

4. Proposed uses.

5. Data clearly identifying the following: existing and proposed total number and types of dwelling units on the property; number and type of all structures or buildings, whether residential or nonresidential; total area of the property; number of dwelling units per acre; and total floor area of each building.

6. Proposed landscaping plan indicating plant types, number and timing for installation.

7. Existing zoning classifications of the property.

8. Existing and proposed type and number of parking spaces on the property.

9. A photometric plan showing proposed light levels for development measured in foot candles. This should, at minimum, show light intensity at the property line, brightest point and average light intensity.

167.13 RESIDENTIAL DWELLING STANDARDS. All dwelling units and accessory buildings as defined under Chapter 165 shall meet the following minimum standards:

1. The minimum dwelling width shall be 22 feet at the exterior dimension.

2. All dwelling units, including attached garages, shall be placed on a permanent frost-free perimeter foundation. A permanent frost-free perimeter foundation is one having footings below the frost line and a continuous foundation wall of concrete, concrete block, or stone. The permanent foundation for a manufactured home, however, may be a pier footing foundation system designed and constructed to be compatible with the structure and the conditions of the site; provided, however, (1) the footings for the pier foundations are placed below the frost line and (2) the manufactured home is skirted with construction materials giving the appearance of a poured concrete, cement block or stone foundation to insure visual compatibility with surrounding residential structures. Ground level additions to a dwelling unit that are served by the dwelling unit's principal heating source require permanent frost-free perimeter foundations. Other enclosed additions to dwelling units may have a pier footing foundation system provided (1) the footings for the pier foundations are placed below the frost line and (2) no pier footing foundations are placed in the front yard of the lot upon which the dwelling is situated. A permanent foundation shall not include footings for steps, porches, decks or stoops.

3. All dwelling units shall provide for a minimum of 800 square feet of ground floor space.

4. Have for the exterior wall covering either:

A. Wood or masonry finish or its appearance, and/or;

B. Vertical or horizontal grooved siding or lap siding or its appearance.

C. All skirting covering pier footings or converted mobile homes shall be visually compatible with adjacent residential structures.

5. No structures within residential districts shall use non-colored sheet metal, corrugated, or flat metal to cover its exterior walls or roof. In addition, the use of vertical colored metal siding is prohibited. Use of standing seam colored metal roofing is permitted.

167.14 BUILDING STANDARDS.

1. The following building standards shall apply to the C-1 District:

A. No structures as defined under Chapter 165 within this district shall use non-colored sheet metal, corrugated, or flat metal to cover its exterior walls or roof. In addition, the use of vertical colored metal siding is prohibited.

2. The following building standards shall apply to the C-2, M-1 and M-2 Zoning Districts:

A. No structures as defined under Chapter 165 within this district shall use non-colored sheet metal, corrugated, or flat metal to cover its exterior walls or roof.

167.15 PURPOSE OF LANDSCAPE PLAN REVIEW. The regulations covering landscape plan review are intended to provide uniform standards for the development and maintenance of landscaping on private property and public right-of-way. Landscaping improves livability of residential neighborhoods; it enhances the appearance and customer attraction of commercial area; it increases property values; it improves the compatibility of adjacent uses; it screens undesirable views; and it can reduce air and noise pollution. The intent of these regulations is to achieve a reasonable balance between the right of individuals to develop and maintain their property in a manner they prefer and the right of the City residents to live, work, shop, and recreate in pleasant and attractive surroundings. The results of this effort will be the strengthening of the economic stability of Anamosa's business, cultural and residential areas. The intent of these regulations is to work with new construction and new subdivisions. The intent is to also regulate plantings within the public right-of-way. In addition, the intent of this chapter is to prevent plantings which would jeopardize the safety of vehicles, property and most importantly people. It is not the intent of this chapter to regulate existing developed private property except in areas as stated within this chapter.

167.16 LANDSCAPE PLANS REQUIRED. The landscape plan requirements of the Tree and Landscaping Regulations Ordinance are as follows:

1. A preliminary landscape plan shall be submitted in support of all preliminary plans. A final landscape plan shall be submitted in support of all final plans. These landscape plans shall be designed and signed by a registered landscape architect/landscape professional (Landscape Business minimum of 3 years) and must be approved by the Zoning Administrator.

2. New residential subdivisions will show requirements for all lots to have approved trees planted within one (1) year after structure is completed. As a minimum, for each lot an approved tree must be planted in the front or front side yard and rear yard or rear side yard. Said requirement shall be part of the subdivision covenants.

3. A landscape plan is required for all residential except single and two-family dwellings, commercial, professional office and industrial developments, redevelopments, additions or changes in usage. When same is adjacent to a residentially zoned area, a landscape plan showing a landscape buffer between the different zoned areas is required. All preliminary and final landscape plans shall have the following information:

A. North point and scale.

B. Topographic information and final grading adequate to identify and properly specify planting for areas needing slope protection.

C. The location, size, and surface of materials of all structures and parking areas.

D. The location, size, and type of all above-ground and underground utilities and structures with proper notation where appropriate, as to any safety hazards to avoid during landscape installation.

E. The location, type, size, and quantity of all proposed landscape materials, along with common and botanical names of all plant species. The size, grading, and condition shall be specified according to American Association of Nurserymen Standards.

F. The location, size, and common name of all existing plant materials to be retained on site.

G. Mature sizes of plant material shall be drawn to scale and called out on plan by common name or appropriate key.

H. The location of all trees ten (10) inch caliper or larger measured ten (10) inches above ground level on the site.

I. The location of all significant stands of trees on the site.

J. Documentation to show that loading spaces and all above-ground utility structures and ground mounted mechanical equipment shall be adequately screened. This includes building mounted utility and mechanical equipment.

167.17 LANDSCAPE DESIGN ELEMENTS. The following basic design elements shall be used in the preparation of a landscape plan:

1. Landscaping shall be used to provide an interesting open space and to break the visual impact of parking areas.

2. Encourage trees and landscape vegetation to screen unsightly views, soften hard architectural lines, frame buildings and views, and buffer between contrasting or lower land uses.

3. Planting design shall coordinate appropriate new plant materials and other environment requirements.

4. The overall quality of existing landscape material shall be considered and treated in the planting design in a similar manner to new landscape material.

5. Service areas and facilities shall be screened from major points of pedestrian access of all buildings and from the public right-of-way.

6. Landscape materials shall be selected and arranged to prevent blocking or obscuring night lighting of pedestrian ways at any stage of growth.

7. Plantings at intersections or driveway entrances off a public or private street shall be arranged to allow a permanent safe sight distance. No plantings, with an ultimate mature height exceeding eighteen (18) inches, shall be planted within the required sight-distance landscape setback triangle.

8. If plantings occur that are determined to be a safety hazard due to restrictions of sight distance, property owner shall be notified by the Public Works Director or Chief of Police to abate hazard. Said notification shall be such as to give property owner sufficient time to abate hazard. If hazard is not abated after proper notification, Public Works Director shall cause said hazard to be removed and removal and administrative cost shall be born by property owner.

SIGHT-DISTANCE LANDSCAPE SETBACK TRIANGLE

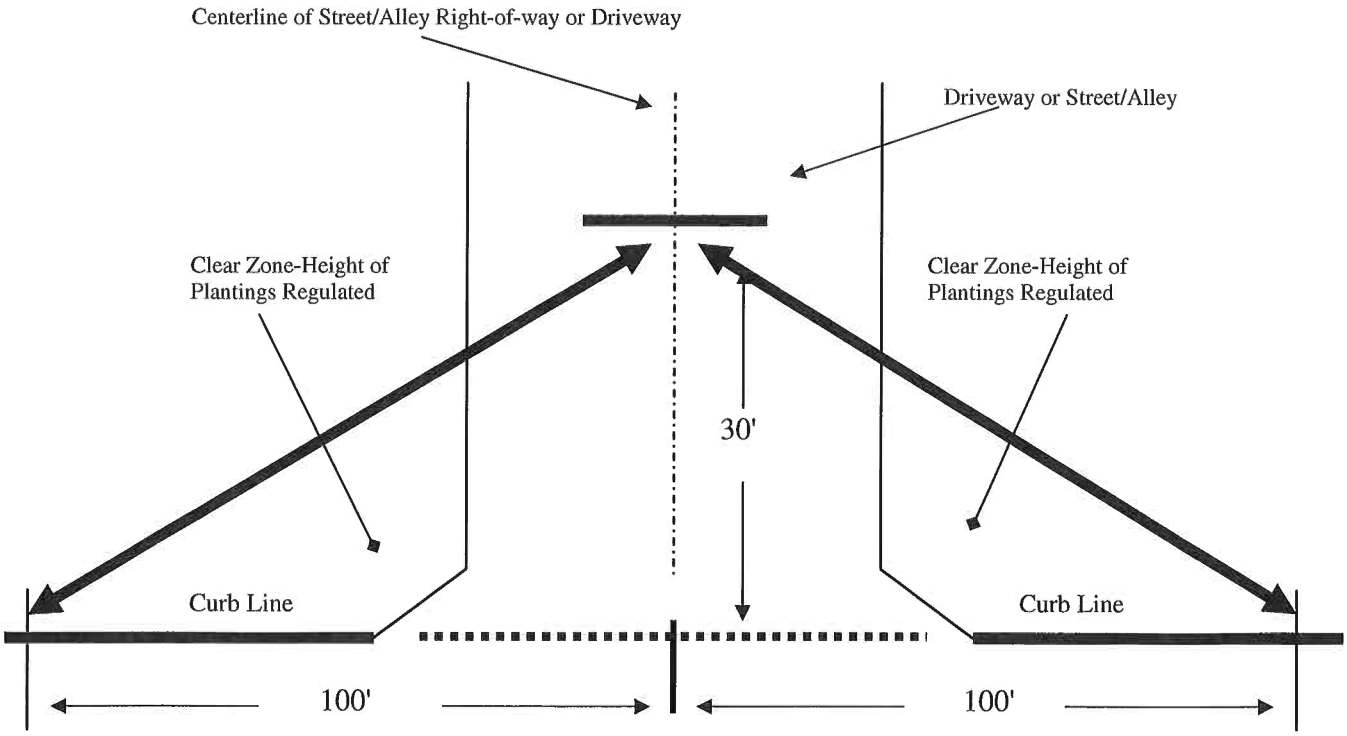

9. Trees or shrubs shall not be planted under existing or planned utility lines when their ultimate height will interfere with the lowest line.

10. Trees and shrubs shall not be planted over underground drainage lines and shall be placed far enough away from the storm and sanitary sewers and water lines to avoid roots entering the lines.

11. Boundary landscaping may be required along all property lines.

12. The design shall serve to preserve, protect, and enhance existing trees and natural landscape areas on the site.

167.18 MINIMUM TREE COVERAGE. The following landscape materials are required as a minimum requirement for all zoning districts, except for the C-1 Zoning District:

1. One (1) street tree per fifty (50) feet, or portion thereof, of street frontage, public or private, shall be required within the public right-of-way abutting said street frontage. Said trees need not be placed evenly at 50-foot intervals. Street Plantings shall follow Chapter 150 of this Code of Ordinances.

2. The following rules and regulations shall govern the planting of street trees in all zoning districts. Maintenance of street trees shall be the responsibility of the property owner.

A. One medium or large street tree per fifty (50) feet of public or private street frontage shall be required to be planted. Plantings shall follow Chapter 150 of this Code of Ordinances.

3. In addition to the required street trees within all the zoning districts, based upon street frontage, eight (8) yard trees shall be required per acre of usable open space. These trees may include trees planted in parking lots and all other required plantings.

167.19 NEW PLANT MATERIAL. The installation size and regulations for all new landscape materials are as follows:

1. Medium and Large Deciduous Shade Trees – one (1) to one and one-half (1½) inch caliper, as measured six (6) inches above the ground as specified by the American Association of Nurserymen.

2. Small Deciduous or Ornamental Trees – six (6) to eight (8) feet in height as specified by the American Association of Nurserymen, with the exception of true dwarf species.

3. Conifers – five (5) to six (6) feet in height.

4. Upright Evergreen Trees – five (5) to six (6) feet in height as specified by the American Association of Nurserymen, except for true dwarf varieties.

5. Shrubs (Deciduous and Conifer, Including Spreader and Globe Tree Forms) – size optional as determined by applicant.

6. Primary Lawns – those essential to the use and appearance of a home or development and usually intended for regular mowing. Shall be planted according to good local horticultural practices with locally acceptable lawn grasses by seeding, sodding, plugging, or sprigging in a manner, which will result in a satisfactory stand of permanent grass. Where the area is not to be mowed, an acceptable permanent ground cover may be used.

7. Secondary Lawns – those consisting of large open spaces maintained as meadows and only occasionally mowed and rear areas of developments, where fine quality lawns are of secondary importance, shall be planted with grass or other ground cover appropriate to the location and intended use.

8. Ground Cover – ground cover plants shall be of good quality, appropriate form, growth habit, and ultimate size to fulfill intended use.

9. Restricted Location – no trees or shrubs shall be planted within the public or private street right-of-way without a permit approved by the Public Works Director for the City.

167.20 MAINTENANCE. The maintenance regulations for all landscaping vegetation are as follows:

1. All landscaping materials depicted on approved landscape or final plans shall be maintained in a neat, clean, and healthy condition. This shall include proper pruning, mowing of lawns, weeding, removal of litter and fertilizing.

2. The developer, successor, subsequent owners of their agents shall be responsible for continuous maintenance of all plant materials.

3. The City shall have the authority to require that dead trees, shrubs and plants on commercial or industrial sites be replaced within the next planting season at the property owner's sole cost and expense.

4. The City shall have the right to plant, prune, maintain and remove trees, plants and shrubs within public grounds, parks, and rights-of-way as may be necessary to ensure public safety.

5. The City shall have the authority to prune, maintain and remove trees, plants and shrubs located upon private property which cause an obstruction to public travel along streets, sidewalks, or impair vision of traffic signals or prevent the proper sight distance at intersections.

6. The City shall have the right to cause removal of any dead or diseased trees, plants, or shrubs on private property within the City, when such trees, plants and shrubs constitute a safety hazard because of site restrictions to

vehicle traffic, hazard to life and property, or harbor insects of disease which constitute a potential threat to other trees, plants, or shrubs within the City. The City's Public Works Director, or any authorized representative, will notify, in writing, the owners of such trees. Said owner at his or her own expense shall do removal within thirty (30) days after date of service of notice. In the event of failure of owners to comply with such provisions, the City shall have the authority to remove such trees and charge the cost of removal to the property owner or have same on the owner's property tax notice.

167.21 COMPLETION OF LANDSCAPING. When the final landscape plan is submitted, a date for completion of all plantings and related work shall be included on the plan. Landscaping shall be installed and completed prior to the issuance of a Certificate of Occupancy, weather permitting. In periods of adverse weather conditions, an irrevocable letter of credit will be accepted for the completion of necessary landscaping, said letter of credit to be equal to one and one-half (1½) times the cost of the landscaping to be completed. A cost estimate for landscaping not installed at the time shall be presented to the City Council for approval. Letters of credit will not be released until all planting and finish materials shown on the approved landscape plan are installed and accepted.

167.22 ENFORCEMENT. Regulations for enforcement of the landscape requirements are as follows:

1. When in the opinion of the Director of Public Works, or an authorized representative, landscaping has not been installed, maintained, or replaced to comply with the approved final or landscape plan, and then said official shall issue a written order to the alleged violator. The order shall specify the sections of the Code of which the individual is in violation.

2. All landscaping on public or private property shall be subject to periodic inspection by the Director of Public Works, or an authorized representative, to detect diseased, dead, or hazardous shrubs, trees, or plants.

167.23 RECOMMENDED TREES. No list of recommended trees is ever complete or static. New species and cultivars are developed and will prove useful, while old standards will be phased out. The following list, taken from Iowa State University Extension Service Bulletin, should provide a broad selection of trees proven to be tough and attractive. The following is a list of trees that are acceptable and not acceptable:

Recommended Street Trees

Acer Platanoides & Saccharum	Norway Maple, Black Maple, Red Maple, Sugar Maple
Carya ovata	Shagbark Hickory
Celtis occidentalis	Hackberry
Corylus colurna	Turkish Filbert
Franxinus Spp.	White Ash, Eurpoean Ash, Green Ash, Blue Ash
Gleditsia triacanthos Var. inermis	Thornless Common Honeylocust
Quercus Spp.	White Oak, Swamp White Oak, Hills Oak, Shingle Oak, Bur Oak, Chinkapin Oak, English Oak, Red Oak, Black Oak
Taxodium distichum	Bald Cyprus
Titlia Spp.	American Linden, Littleleaf Linden, Redmond Linden, Eurpoean Linden
Ulmus "Regal"	Regal hybrid Elm

Unacceptable Street Trees:

Ginkgo bilboa (Female)	Female Ginkgo
Betula papyrifera	Paper/White Birch
Maculara pomifera	Osage Orange, Hedge Apple
Malus Spp.	Apples, Crabapples
Populus Spp.	Poplars, Cottonwoods, Aspen
Prunus Spp.	Cherries, Plums

Recommended Plant Materials For Detention Areas

Acer rubrum	Red Maple
Acer saccharum	Sugar Maple
Betula nigra	River Birch
Franxinus quadrangulata	Blue Ash
Gymnocladus dioicus	Kentucky Coffeetree
Jaglans nigra	Black Walnut
Quercus bicolor	Swamp White Oak
Taxodium disfichum	Bald Cyprus

167.24 SHRUBS. Shrubs are not acceptable plants in the street right-of-way setback triangle. Any other plantings or ground cover planted in the street right-of-way setback triangle shall not attain a height greater than eighteen (18) inches at maturity.

(Ch. 167 added by Ord. 718 – Sep-04 Supp.)